APPENDIX O

DREDGED MATERIAL MANAGEMENT OFFICE: MEMORANDUM OF UNDERSTANDING

11. Agencies will implement the DMMO formulated through the pilot program, subject to review and approval by the decision makers at each agency after public review and comment.

12. One of the agencies will act as the "host" agency in orde: to provide a single point of contact for applicants and to provide necessary logistical support. That agency is presently the U.S. Army Corps of Engineers. Logistical support will include providing meeting space; preparing agendas; preparing meeting minutes; distributing information among participants, applicants, and interested parties; and maintaining files.

13. A combined database will be created to share information among the agencies, applicants, and interested parties.

14. The project will be expanded over time, as appropriate, to coordinate agency processing of all dredging and disposal permit applications, disposal site monitoring, and other important regulatory aspects of LTMS implementation.

15. This document will stay in effect until it is superseded through adoption of Memoranda of Understanding or other appropriate instruments by the member agencies.

WILL TRAVIS
San Francisco Bay Conservation & Development Commission

AMY ZIMPFER
U.S. Environmental Protection Agency

LT. COL. MICHAEL J. WALSH
U. S. Army Corps of Engineers

for LARRY KOLB
Regional Water Quality Control Board
San Francisco Bay Basin

for WALT PETTIT
State Water Resources Control Board

ROBERT C. HIGHT
State Lands Commission

SOURCE: BCDC, 1996

Figure 1
Pilot Dredged Material Management Office (DMMO) Geographic Area

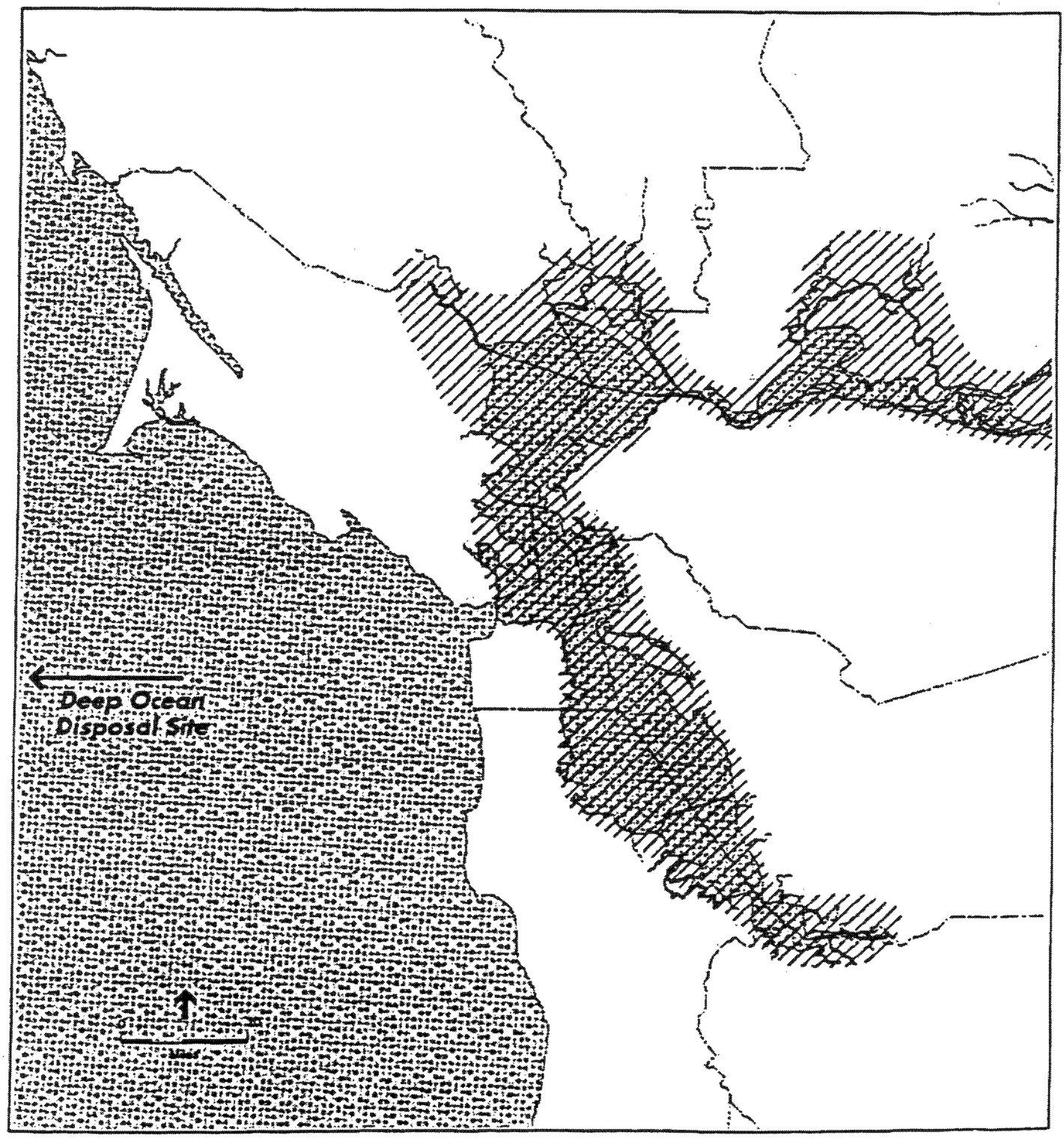

Draft DMMO Flowchart and Timeline Goals for Maintenance Dredging Projects

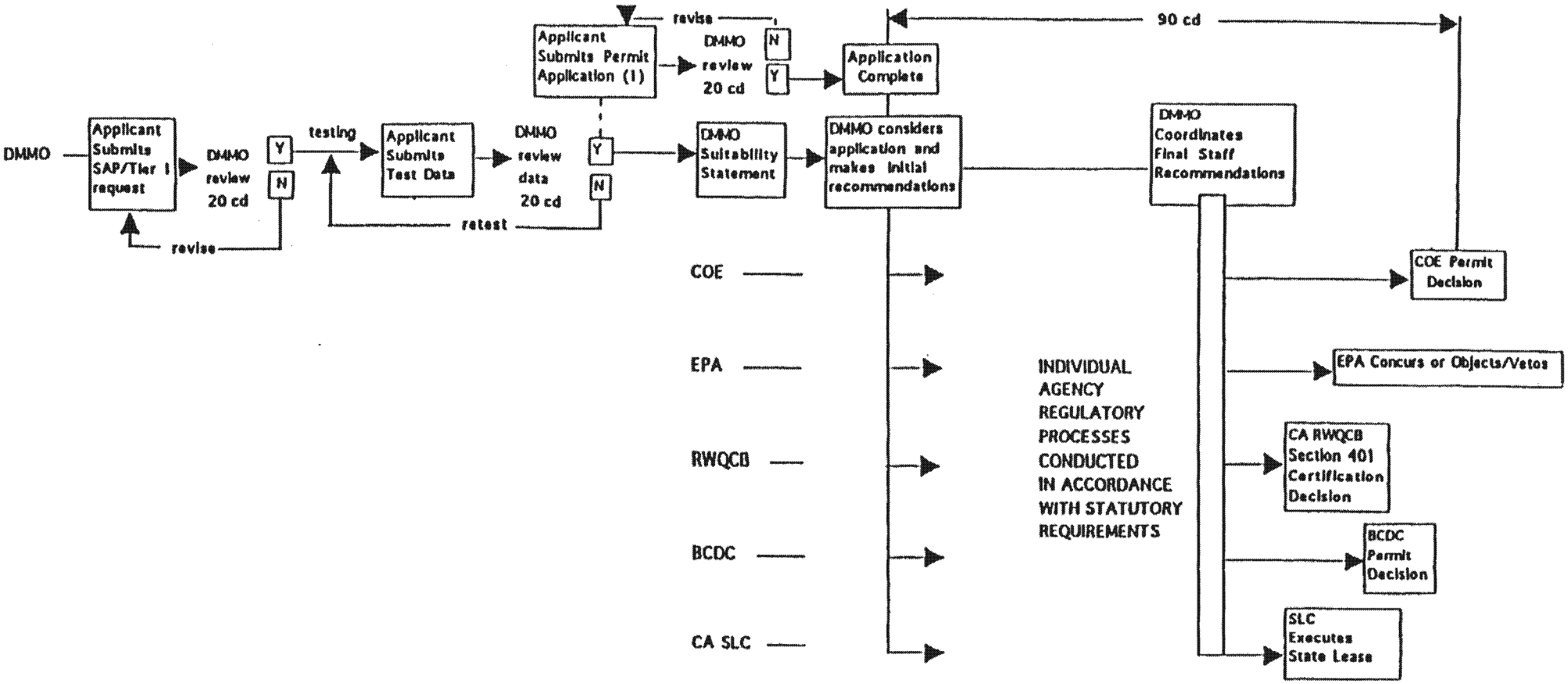

cd = calendar days

(1) The LTMS Consolidated Dredging-Dredged Material Reuse/Disposal Permit Application Form should be completed and submitted to the DMMO either at this point in the process or earlier if desired by the applicant.

DMMO -	Dredge Materials Management Office
COE -	Corps of Engineers
EPA -	U.S. Environmental Protection Agency
RWQCB -	CA Regional Water Quality Control Board
BCDC -	San Francisco Bay Conservation and Development Commission
CA SLC -	CA State Lands Commission
SWRCB -	State Water Resources Control Board
SAP -	Sampling and Analysis Plan

(7/3/96)

management plan alternatives selected in the EIS/EIR for the LTMS program. It is envisioned by the member agencies that more tasks will be added to the DMMO over time as the effectiveness of the DMMO is demonstrated. These tasks could include joint agency sediment-suitability decisions, processing of all dredging and disposal permit applications and Corps civil work dredging and disposal projects, and establishing a database of sediment test results.

During the first six-month phase, the following conditions will apply:

a. The COE will undertake the role of host agency.

b. The DMMO will process all maintenance dredging and disposal permit applications.

c. COE civil works projects, navigation improvements, etc., shall not be processed through the DMMO.

d. Large new-work dredging and disposal projects and projects where dredging and disposal is a minor part of the project (as determined on a case-by-case basis) will not be processed through the DMMO.

e. Each member agency will issue sediment suitability recommendation letters.

After the completion of each pilot phase, the member-agency staffs will prepare a report to the Dredging Management Committee on the progress and success of the DMMO. The reports will contain an analysis of problems and issues and recommendations for further actions. Within one month of receipt, the DMC shall review the progress reports, decide whether to continue with the DMMO, and revise, as necessary, the conditions under which the office will operate.

The second phase will implement the DMMO subject to the revisions, if any, approved by the DMC.

At the end of the Pilot program the DMC will initiate whatever changes are needed to implement a permanent DMMO, based on the findings and recommendations of the two reports prepared by member agency staff.

This MOU is intended to remain in effect for as long as it continues to serve the purpose and objectives defined herein, subject to the following conditions:

a. This MOU may be modified or amended by mutual consent of the signatories to this agreement or their designees. All such changes shall be documented by written agreement.

b. Any of the agencies may terminate this MOU thirty (30) days after giving formal written notice of intent to terminate.

MEMORANDUM OF UNDERSTANDING
BETWEEN
THE U.S. ARMY ENGINEER DISTRICT, SAN FRANCISCO
AND
SAN FRANCISCO REGIONAL WATER QUALITY CONTROL BOARD
AND
CALIFORNIA STATE LANDS COMMISSION
AND
U.S. ENVIRONMENTAL PROTECTION AGENCY
AND
SAN FRANCISCO BAY CONSERVATION AND DEVELOPMENT COMMISSION

July 3, 1996

SUBJECT: Memorandum of Understanding for the Pilot Dredged Material Management Office

1. Purpose. This Memorandum of Understanding (MOU) provides for the creation of a Pilot Dredged Material Management Office (DMMO) for the San Francisco Bay Region. This office is established to foster a comprehensive, and consolidated approach to handling dredged material management issues in order to reduce redundancy and delays in the processing of dredging permit applications. This MOU addresses the implementation of a "pilot" DMMO; it does not propose a permanent physical office. The DMMO is a phased program (See Section 12). The first two phases constitute the "pilot" program and each of these phases will last six (6) months. The pilot phases will implement the basic approach as outlined in this document and include the processing of dredging and disposal permit applications in order to judge the effectiveness of the approach and the need for subsequent modifications. It is envisioned by the member agencies that more tasks will be added to the DMMO over time as the effectiveness of the DMMO is demonstrated.

2. Disclaimer. Nothing written in this MOU shall be construed as an agreement, expressed or implied, which amends, negates or otherwise changes the legal statutory and regulatory authority of any member signatory agency or any interested party. The sole intent of the DMMO is to improve the dredging permit process within existing law, regulation and policy.

3. References.

   a. *General Operating Principles, Pilot Dredged Material Management Office (DMMO)*, signed by the Dredging Management Committee members and dated 12 September 1995.

   b. *Draft DMMO Flowchart and Timeline Goals for Maintenance Dredging and Disposal Projects*, dated July 3, 1996.

4. History. The competing needs of various San Francisco Bay user groups, the ports and related industries, sport fisherman, and the environment reached a crisis point in 1989 when considerable controversy arose over dredged material disposal in San Francisco Bay. A consensus-based approach, entitled the "Long Term Management Strategy (LTMS) for dredged material management," was initiated in 1990, to address and resolve the "dredging problem". The goal of the LTMS is to a create a fifty year plan manage dredged material dredging and

disposal activities. The San Francisco Bay Regional Water Quality Control Board (Regional Board), State Water Resources Control Board, San Francisco Bay Conservation and Development Commission (BCDC), United States Environmental Protection Agency (USEPA) and United States Army Corps of Engineers, South Pacific Division and San Francisco District (COE) are signatories to the LTMS program.

This DMMO results, in part, from the findings of the LTMS Implementation Committee which examined the issue of permit streamlining. The Committee formed a task group to draw up a process for a "one stop" permit approach for dredging permits. In 1992, the task group drafted a permit streamlining initiative with general goals and objectives. The resultant DMMO proposal was modeled after the Puget Sound Dredge Disposal Analysis (PSDDA) approach, which relies on a partnership of federal and state agencies.

In 1995, the LTMS agencies decided to form a pilot DMMO, under existing authorities and budgets. The COE agreed to initially act as the "host" of the DMMO and take on responsibilities associated with the lead role. The roles and responsibilities of the host agency, as well as the other participants, are addressed in this MOU. The MOU is consistent with, and is intended to implement, the fourth goal of the LTMS which is to provide "recommendations for federal, state and local agencies to implement a cooperative permitting process for authorizing dredging activities."

5. **Geographic Area.** The DMMO geographic area includes: all of the San Francisco Bay Estuary up to Sherman Island, its major tributaries up to points where navigation is no longer feasible, upland areas surrounding the estuary, and ocean disposal sites for Bay material designated by the COE and/or USEPA. (See Figure 1.) However, the member agencies will strive to coordinate with the Central Valley Regional Water Quality Control Board regarding use of Bay dredged material in the Sacramento/San Joaquin Valley region.

6. **Definitions.** For the purpose of this memorandum of understanding the following definitions apply:

   a. "Host" Agency. COE, San Francisco District will be the host agency: (1) providing logistical support for the meetings to include providing meeting rooms, preparing agendas, preparing meeting minutes, distributing information among participants, applicants, and interested parties; and maintaining project files; and (2) acting as the main clearinghouse and initial point of contact on DMMO matters.

   b. "Member Agencies." The signatories to this MOU.

   c. "Interested Party." Any person or agency that has an interest or involvement in the issuance of dredging permits and management of dredged material in the SF Bay Area.

   d. "Dredging Management Committee." A committee made up of each signatory agency's executive-level staff person or commander.

   e. "Uplands." Locations within the Bay Area that are outside "navigable waters", i.e. above the high tide line. Note that "Uplands" may possess wetland characteristics and be regulated as wetlands.

f. "Complete Permit Application." An application that contains information judged adequate by the member agencies to process the application, including results of testing that have been approved by the member agencies.

7. **Problem.** The de facto permitting system for dredging and disposal can be lengthy and complex and consists of six federal and state agencies that issue a permit or other legal approval. In addition, federal and state laws require that resource agencies comment on many of the permit actions and consider endangered species impacts under their own jurisdiction (Section 7 Consultation). The actual number of permits and types of approvals depend upon the location of the dredging and disposal sites, ownership of project area, and whether the project requires new permits or is considered an episode under existing permits. Coordination of the dredging permitting process to decrease redundancy and increase efficiency is a main purpose of the DMMO.

   Secondly, the suitability determination for the disposal of dredged material often requires agency interpretation of an extensive battery of tests which characterize the physical, chemical, and biological nature of the sediment proposed for dredging. The contributions of member agencies to the suitability determination process reflect the staff's differing areas of technical expertise. Thus, the coordinated exchange of technical information among staff creates a common knowledge base to insure that permit actions are taken in a consistent and timely manner.

8. **Goals, Objectives, and General Operating Principles.** These items are contained in the *General Operating Principles,* which is incorporated by reference.

9. **Scope.** This MOU will provide the operating guidance necessary to implement the Pilot DMMO under the previously agreed upon *General Operating Principles.*

10. **Required Actions.** The Pilot Dredged Material Management Office will make joint staff recommendations on the approval, modification or denial of:

    a. Sampling and testing plans;
    b. Results of testing pursuant to the approved plans;
    c. Consolidated Permit Application completeness; and
    d. Material suitability for disposal at existing in-bay disposal sites, ocean disposal site or upland disposal sites (DMMO staff members will sign a DMMO recommendation for a given disposal site only if they have regulatory authority for that site).

    Agency staffs will also recommend general permit conditions (i.e. length of permit, bathymetric surveys) and special permit conditions (i.e. timing of dredging operations, turbidity controls), as appropriate, to be included in permit approvals.

    Agency staffs shall support the consensus recommendations made through this process subject to final approval by the respective agencies. Recommendations will be documented in the minutes of the meetings and through member agency correspondence.

11. DMMO Agreements, Responsibilities And Roles

For at least the first phase, DMMO responsibilities and roles will be as follows:

a. Host Agency Role.

1. Provide logistical support (meeting rooms, etc.).

2. Provide for agenda preparation and distribution, a mutually agreeable schedule of meetings, and preparation of meeting minutes and their distribution.

3. Provide staff who are knowledgeable regarding DMMO projects and actions to act as the initial point of contact to and field questions from applicants and the public regarding the DMMO, and to refer inquiries to appropriate member-agency staff.

4. Maintain current files on the projects under the Pilot DMMO Program.

5. Coordinate processing of emergency dredging requests.

6. Prepare and mail joint Public Notices on DMMO matters.

7. Maintain (1) an electronic database for DMMO data containing status of dredging and disposal applications, and (2) electronic records of disposal site monitoring data that are accessible to the member agencies, applicants and the public.

b. Member Agency Roles.

Each agency will provide adequate staff to participate in the DMMO. Knowledgeable staff will attend each scheduled meeting and at least one meeting will be held each month. At least one primary and one backup staff member will be designated to ensure that there will be representation from all DMMO member agencies. DMMO staff will work together in a cooperative approach as outlined in the General Operating Principles. Each representative will strive to reach consensus with the other DMMO members while representing the laws and policies of his or her agency. DMMO staff representatives will sign a DMMO recommendation for a given disposal site only if they have regulatory authority for that site. Member agencies may be required to provide electronic updates to the database mentioned above.

c. Role of Non-member Resource Agencies

The non-member resource agencies, United States Fish and Wildlife Service, National Marine Fisheries Service and California Department of Fish and Game, will be requested to attend the DMMO meetings to provide their expertise and participate in discussions of the suitability of material for disposal, and any special permit considerations. While the non-member resource agencies will be invited to provide their recommendations, the member agencies will make the final DMMO recommendations on permit/lease related matters.

d. **Public Review and Input.**

1. **Project Notification.**

The member agencies will continue to follow their existing notification and comment procedures on pending applications, including circulation of staff reports, public notices, response letters, etc. The host agency will also provide information on the status of permit applications and other activities pending before the DMMO through an electronic database that can be accessed by applicants and the public through the internet.

A listing of all pending and recently approved 401 Water Quality Certification actions and 404 Nationwide Permits issued in the San Francisco Bay Area, pursuant to the federal Clean Water Act, will also be available from the Regional Board via a voice mail system and an internet connection (WWW Site).

2. **Comments.**

In addition to comments received through the existing public comment process of the member agencies, written comments on the DMMO or pending applications will be distributed by the host agency for consideration by member agencies at regularly scheduled meetings. An applicant or interested party may make a presentation to the DMMO staff at a regularly scheduled meeting, provided that the presentation is scheduled in advance with the DMMO host and any written materials are submitted a week in advance of the meeting.

If any additional tasks are added to the DMMO as a result of the final implementation plan, public involvement will be revisited to determine whether additional special public involvement is necessary.

3. **Annual Review.**

At least once per year, the DMMO will prepare an annual report and conduct a public meeting on the report. The report will contain information regarding dredging projects, permit issues, disposal site monitoring and other matters considered during the year. Presentations will be made, as needed, on technical issues and any studies and research that may have a direct or significant bearing on management of Bay Area dredging and disposal activities. The proceedings of the annual meeting will be compiled and made available to the public.

e. **Conflict Resolution.**

If consensus on substantive issues cannot be reached by the staff assigned to the DMMO, then a meeting or conference call will be arranged as soon as possible with the Dredging Management Committee (DMC). The DMC will attempt to resolve the conflict to the mutual satisfaction of the members. If resolution is not accomplished within two (2) DMC meetings, then the subject project will no longer be managed under the auspices of the DMMO and existing agency policies and procedures will be applied to the project. The Host agency will prepare a written report to be signed by all members, which will document in detail for the DMC, the nature and magnitude of the disagreement.

If a member agency determines that a pilot application will not be processed in an acceptably expeditious time period, then, after informing the other DMC members by phone or in writing, it may withdraw processing of the pilot application from the DMMO.

f. Timelines and Process.

The following time frames will be considered goals:

1. The member agencies will respond to inquires from applicants, the public or each other, within two (2) days for telephone responses, and within one (1) week for written response.

2. The DMMO will respond to an applicant's submittal of sampling plans within three (3) weeks of receipt.

3. The DMMO will respond to applicants submittal of the sampling results within three (3) weeks of receipt.

4. The Host agency will distribute to the member agencies any submittals by applicants within five (5) days of receipt.

5. The member agencies will respond to applicants regarding the completeness of a submitted application within thirty (30) days after the application is submitted.

6. The Host agency will prepare and distribute draft meeting minutes to member agencies within five (5) days of the meeting date.

7. The DMMO agencies will issue any necessary public notices, or other staff reports regarding pending applications within thirty (30) days after the application is deemed complete.

8. The DMMO agencies will process applications in an expeditious manner so that the member agencies can issue or deny permits for those applications within ninety (90) days after the application is deemed complete.

9. Applicants will have an opportunity to appeal a DMMO recommendation, but only if DMMO staff agrees that there are sufficient grounds to warrant reconsideration, based on the written request and documentation submitted by the applicant. If a recommendation is modified by the member agencies, the host agency will make a written finding for the record. The applicant will be notified by letter or through a supplemental public notice.

12. Amendment, Duration and Termination. The DMMO is a phased program. The first two phases constitute the "pilot" program and each of these phases will last six (6) months. The pilot phases will implement the basic approach as outlined in this document and include the processing of dredging and disposal permit applications in order to judge the effectiveness of the approach and the need for subsequent modifications. The first six-month phase will begin upon signature by the member agencies, and the member agencies will use the results of the first phase to reevaluate DMMO tasks as well as agency responsibilities, consistent with

13. **Effective Date.** This MOU is effective immediately after execution by all the signatories.

WILL TRAVIS
San Francisco Bay Conservation & Development Commission

7/8/96
(date)

AMY ZIMPFER
U.S. Environmental Protection Agency

7/8/96
(date)

LT. COL. MICHAEL J. WALSH
U.S. Army Corps of Engineers

(date)

LORETTA BARSAMIAN
Regional Water Quality Control Board
San Francisco Bay Region

7.9.96
(date)

ROBERT C. HIGHT
State Lands Commission

7-3-96
(date)

Long Term Management Strategy

September 12, 1995

General Operating Principles
Pilot Dredged Material Management Office (DMMO)

Goals

To establish a cooperative permitting framework as part of LTMS implementation that reduces redundancy and unnecessary delays in permit processing and increases consensus decision-making among agency staffs, while assuring that: (1) the laws and policies of the member agencies will be fully implemented; (2) full public review and input to the decision making process will be maintained; and (3) projects will be managed in an environmentally and economically sound manner.

Objectives

- Combined application form for maintenance dredging applications.
- Coordinated staff processing of all dredging permit applications.
- Preparation of joint staff recommendations on: (1) sediment quality sampling and analysis plans; (2) suitability calls for disposal; and (3) approval or denial of permits (including disposal location, timing, and other permit conditions).
- Increased beneficial use of dredged material.
- Creation of a shared database for dredging project and disposal site monitoring information.

General Operating Principles

1. The DMMO is a cooperative activity of the participating agencies.
2. Agency staffs will coordinate processing of pilot permit applications by the agencies, subject to the applicable laws and requirements of each agency.
3. Agency staffs will make a combined decision regarding sediment quality sampling and analysis plans, and suitability for disposal of pilot applications.
4. Agency staffs will work towards a single staff recommendation on substantive aspects of pilot permit applications, including disposal locations and proposed special conditions.
5. Agency staffs will support the consensus recommendation made through the DMMO that affect projects within their permit jurisdictions, subject to final approval by agencies.
6. Agency staffs will improve and refine the joint-agency application form for maintenance dredging permits.
7. The program will accommodate the policies and laws of the participating agencies.
8. The pilot program policies will be based on agreements and policies reached as part of the LTMS whenever possible.
9. The administrative process for processing permits as part of the pilot project will be defined by mutual agreement of agency staffs and documented in a Memorandum of Understanding.
10. Full public input to the permit process as part of the pilot project will be ensured, and the pilot project itself will be subject to full public review and comment.